ATLAS

Dana

Both ceiling fan and LED pendant, Dana is our most versatile fixture. Her diminutive blades and LED light kit are concealed by intricate, organically inspired metal work finished in Matte Black, Matte White, Brushed Bronze, or Brushed Brass. Constructed of cast aluminum and heavy stamped steel, the Dana carries a limited lifetime warranty.

Product Features

- AC Motor
- Damp Location
- Soothing White Noise
- LED Lamp
- Dimmable Lamp
- Remote Control
- Wall Control
- 29° Slant Ceiling Canopy
- 60° Cathedral Ceiling Canopy
- Unipack Shipping

shown in Brushed Bronze

shown in Matte Black

shown in Matte White

DANA

FINISH AND BLADE OPTIONS		
SKU#	**DM-XXXX** (Model+Finish)	
Standard Finishes	Brushed Brass	**BRBR**
	Brushed Bronze	**BB**
	Matte Black	**BK**
	Matte White	**MWH**

TECHNICAL SPECS	
Fan Diameter	20 inches / 51 cm
Blade Material	Rubber
Overall Drop	16 inches / 41 cm + downrod length
Fan Weight	23 lbs
Voltage	110 or 220
Motor Type	AC
Downrods Lengths *Field cuttable, Non-Threaded*	inches: 5, 10, 20, 30, 48, 72 centimeters: 13, 25, 51, 76, 122, 183
Downrod Diameter	1 inch
Environment	Damp locations for all finishes. Neither coastal, saltwater nor chlorine compatible.
Ambience	Soothing White Noise
Safety Certification	UL / CUL
Warranty	Limited Lifetime

NEW JAN 21, 2020 DOE MOTOR EFFICIENCY DATA	
RPM (Low / High)	1095 / 1666
CFM (Low / High)	691 / 1100
Watts (High)	32
CFM/Watt (High)	42
Blade Pitch	31°

LIGHT KIT PHOTOMETRICS	
Lamping (Replaceable)	Integrated LED
Remote Dimmable	Yes
Delivered Temperature in K	2923
Delivered Lumens	578
CRI	93.8
Watts	24
Hours	49,000
Light kit longevity if used 6 Hours/Day: 22.4 Years	

STANDARD EQUIPMENT
One downrod of 10 inches / 25 cm
Vaulted ceiling canopy for up to 29°
Light cover

ACCESSORIES

Black 3-speed RF remote control with reverse

Decora-style, 3-speed, non-dimmable wall control

60° cathedral ceiling canopy

Dana

TECHNICAL SPECIFICATIONS

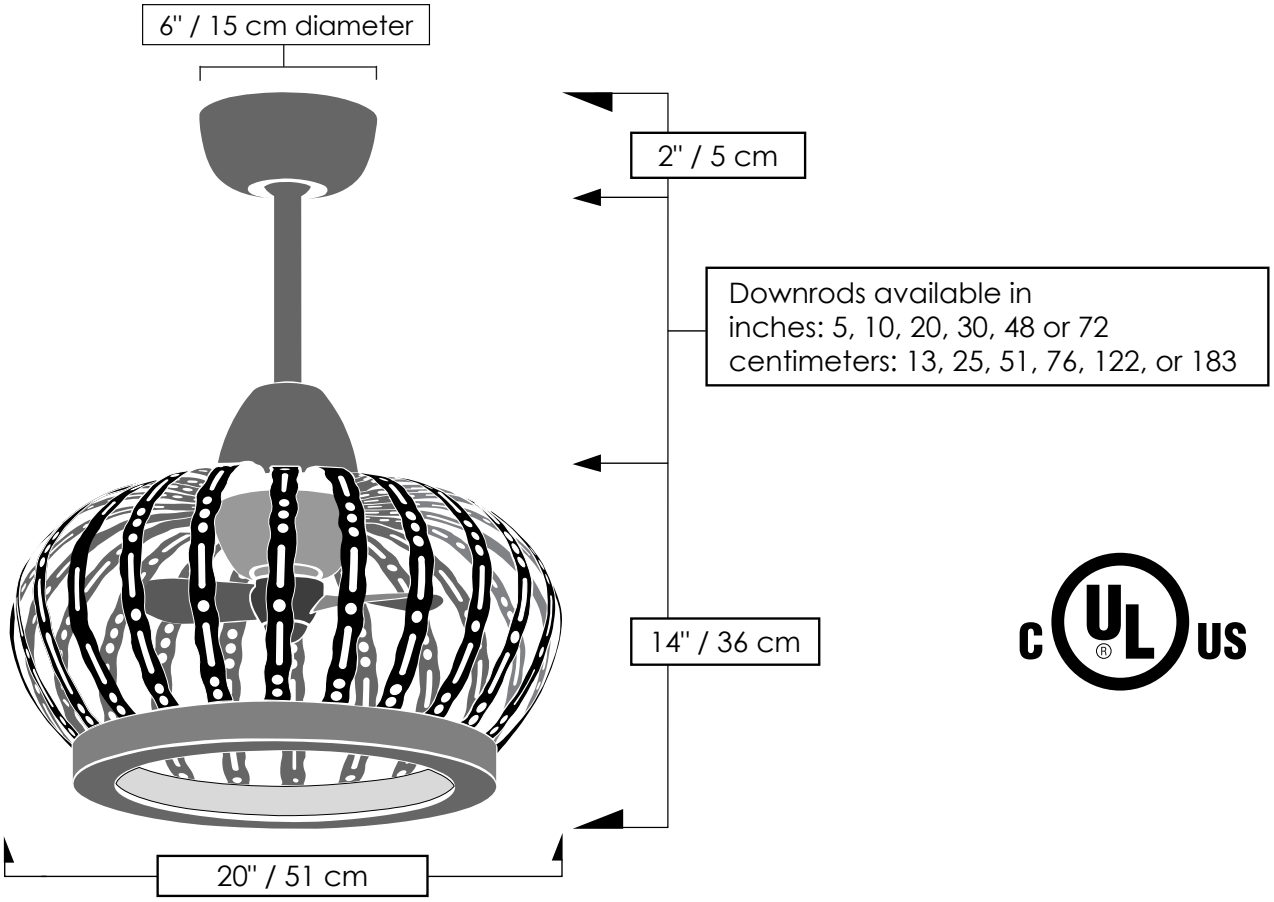

CEILING PITCH TABLE	
0/12	0 degrees
1/12	4.76 degrees
2/12	9.46 degrees
3/12	14.04 degrees
4/12	18.43 degrees
5/12	22.62 degrees
6/12	26.57 degrees
7/12	30.26 degrees
8/12	33.69 degrees
9/12	36.87 degrees
10/12	39.81 degrees
11/12	42.51 degrees

CEILING HEIGHT / DOWNROD TABLE	
Ceiling Height	Downrod Lengths *Field cuttable. Non-threaded*
10 ft or less	5 inches / 13 cm *Use safety cages if applicable*
10 -12 feet	10 inches / 25 cm
13 feet	20 inches / 51 cm
14 feet	30 inches / 76 cm
15 feet	48 inches / 122 cm
16 feet +	72 inches / 183 cm

Matthews Fan Company
1881 Industrial Drive
Libertyville, IL 60048
Tele: 847.680.9043
Fax: 847.680.8140
www.matthewsfanco.com
© 2023Matthews Fan Company. All rights reserved.